Installation insrruction(R)

Parts list

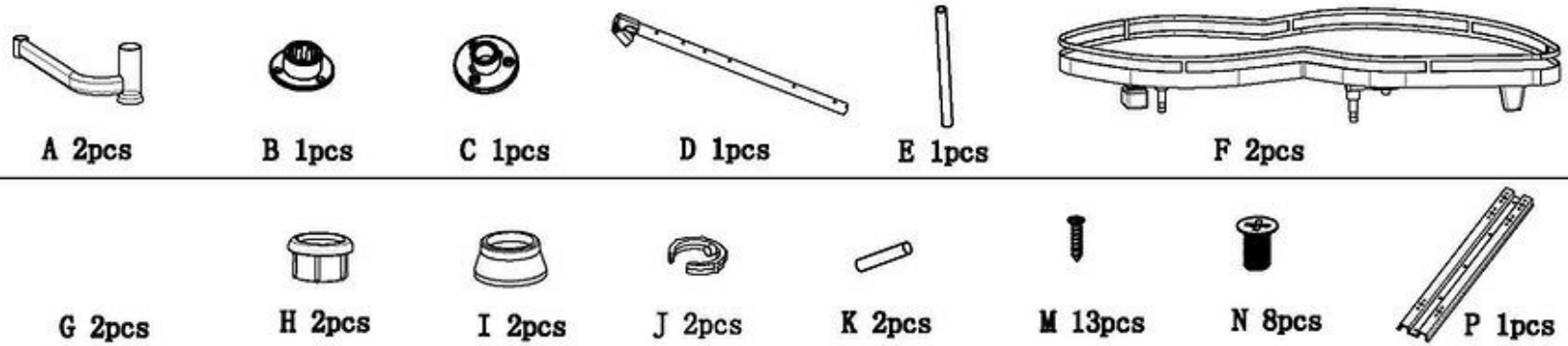

1、Fixed P, B and C pieces according to the size of figure (1).

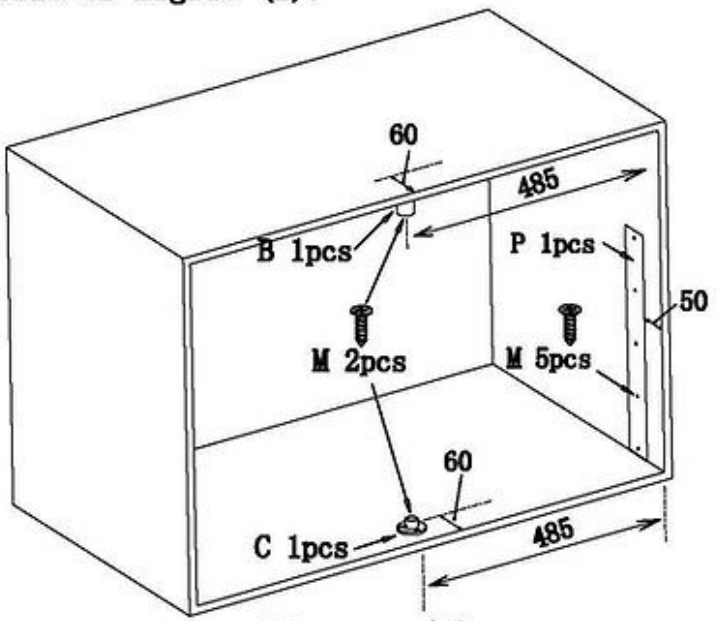

Picture(1)

2、According to the figure (2), install the G parts, lock the B and C parts, and locate the points a and b respectively.

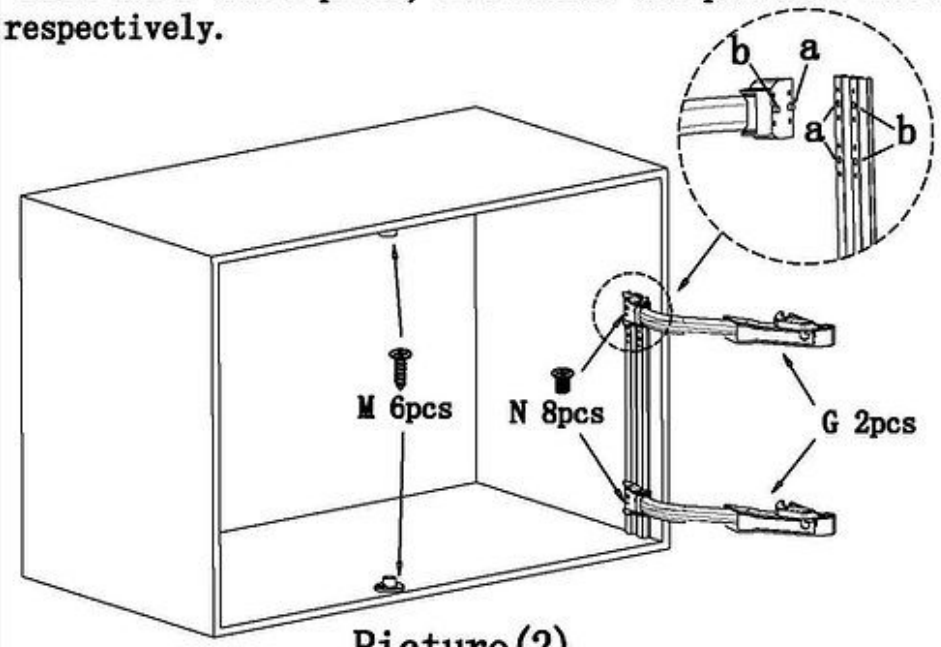

Picture(2)

Installation insrruction(R)

Parts list

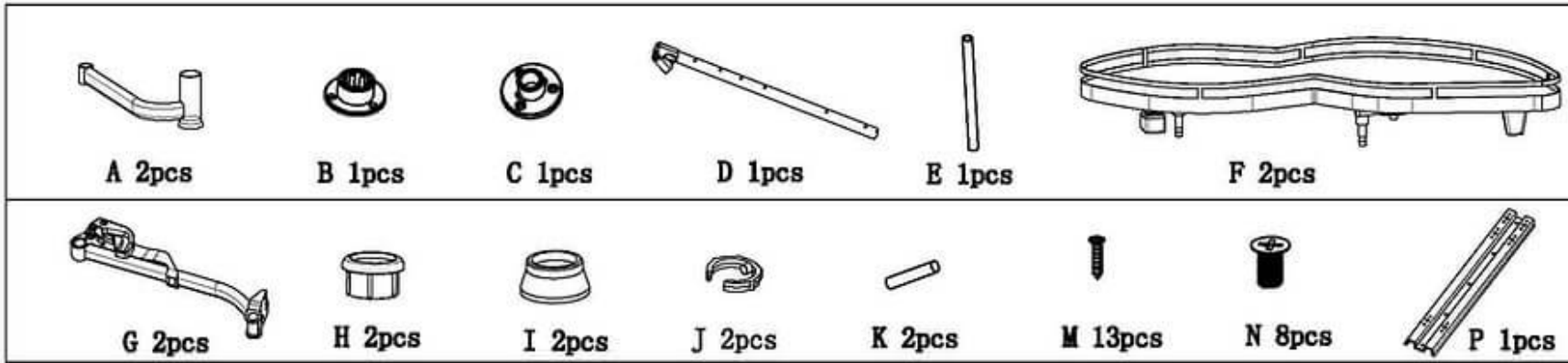

3、Fix accessories H, A, I and K from top to bottom according to figure (3) On the main frame D, then install J parts, and finally assemble E parts, adjust a and b holes. Part height.

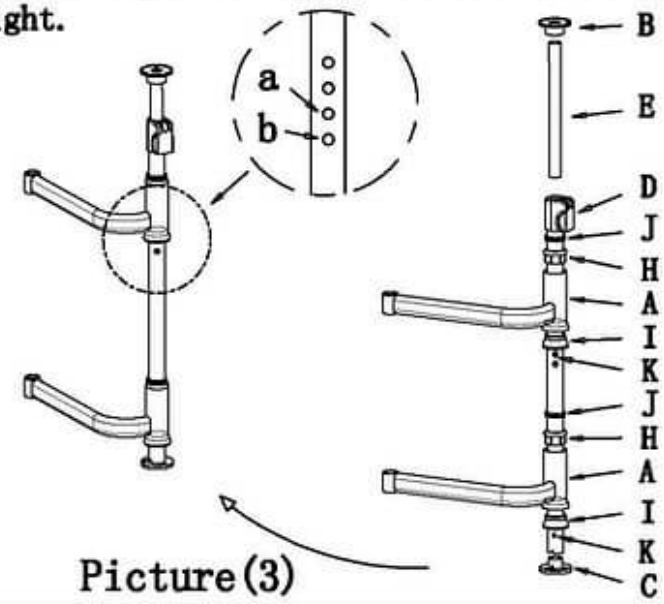

Picture(3)

4、Install F parts into cabinet according to figure (4), Pin a falls into slot B.

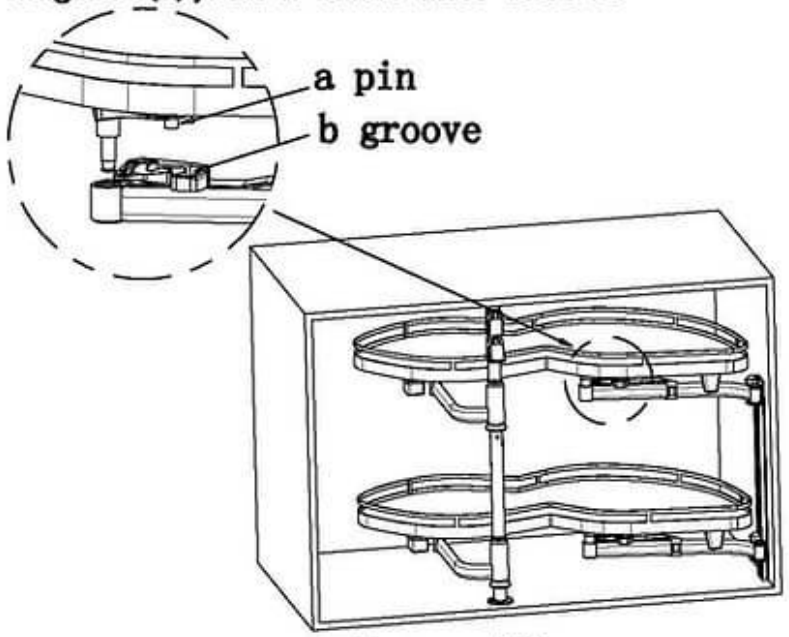

Picture(4)

Installation Instructions(L)



1.Accessories list

A.2PCS	B.1PCS	C.1PCS	D.1PCS	E.1PCS	F.2PCS
				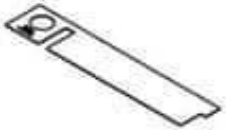	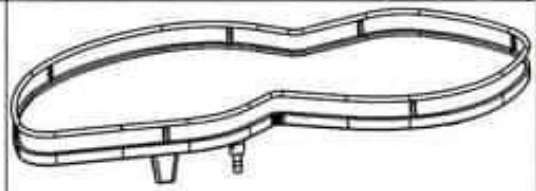

G.2PCS	H.5PCS	I.2PCS	J.2PCS	K.2PCS	L.8PCS	M.2PCS	N.1PCS	P.4PCS	Q.4PCS
	 ST4*20				 ST4*16	 M4*8		 M6*10	

2.Choose the right cabinet

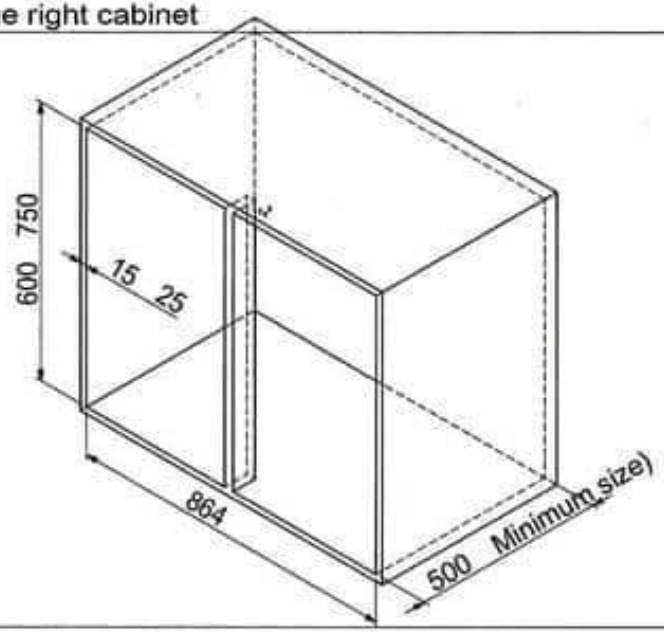

3.Mounting accessories B/C/N

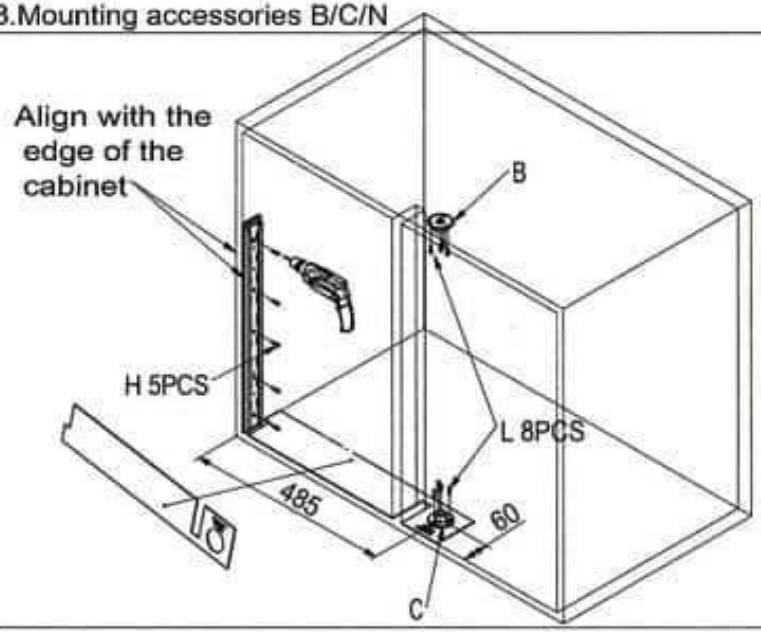

Installation Instructions(L)

